SS-CT550

SERVICE MANUAL

Ver 1.1 2001. 10

US Model
Canadian Model
AEP Model
UK Model
E Model
Australian Model

- SS-CT550 is the speaker system in DAV-C900/S800.

SPECIFICATIONS

Speaker system	Bass reflex
Speaker unit	50 mm (2 inches) dia. cone type
Rated impedance	6 ohms
Dimensions (approx.)	260 × 83.5 × 82.7 mm (10 1/4 × 3 3/8 × 3 3/8 inches) (w/h/d)
Mass (approx.)	0.65 kg (2 lb 2 oz)

SPEAKER SYSTEM

9-873-286-02
2001J1600-1
© 2001.10

Sony Corporation
Home Audio Company
Published by Sony Engineering Corporation

SONY®

EXPLODED VIEW AND PARTS LIST

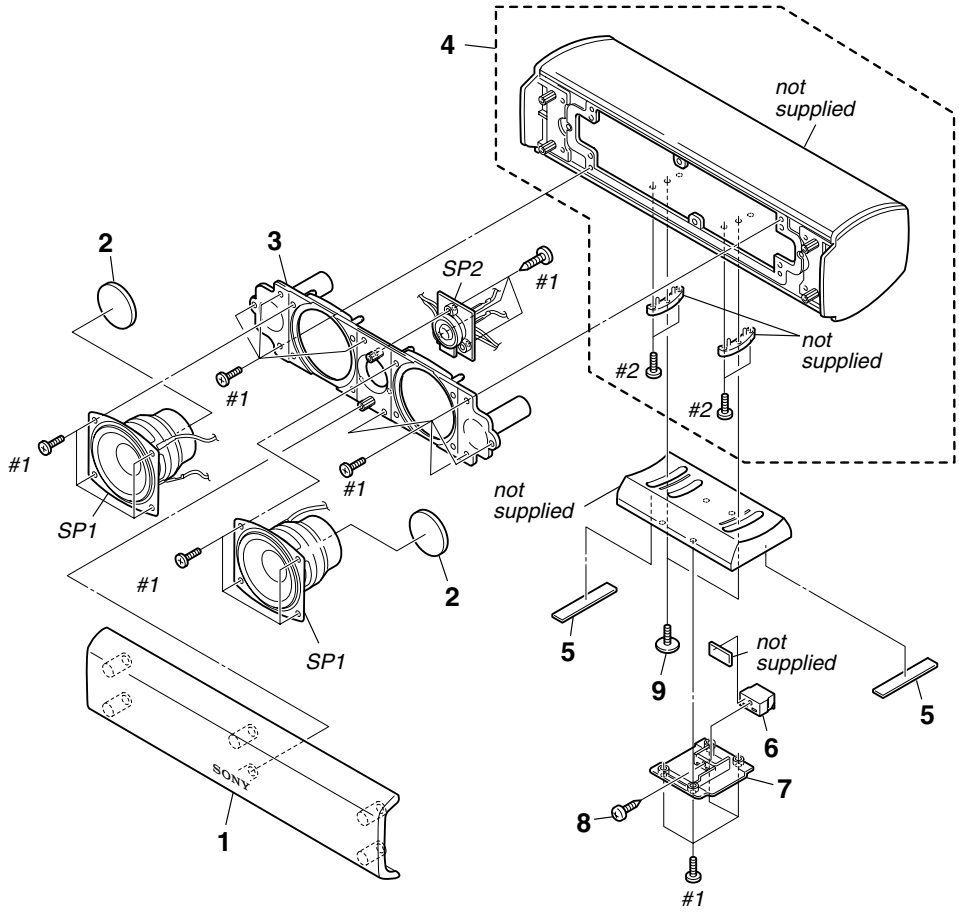

Ref. No.	Part No.	Description	Remarks
1	X-4954-185-1	BRACKET NET (CENTER) SUB ASSY	
2	4-237-441-01	RUBBER (SPK), CUSHION	
3	4-236-935-01	PANEL, BUFFLE (CENTER)	
4	A-4735-531-A	ALMINUM CENTER ASSY	
5	4-236-755-01	FOOT (CENTER)	
6	1-694-836-11	TERMINAL, SPEAKER	
7	4-236-934-01	COVER (JACK)	

Ref. No.	Part No.	Description	Remarks
8	4-237-867-01	SCREW (3.5X10), +BTP TAPPING	
9	4-237-082-01	SCREW (2-6X10), PWH TAPPING	
SP1	1-544-955-11	SPEAKER (56mm)	
SP2	1-544-942-11	LOUD SPEAKER (1.1cm)	
#1	7-685-535-14	SCREW +BTP 2.6X10 TYPE2 N-S	
#2	7-685-105-14	TAPPING +P 2X8 NON-SLIT	

MEMO

REVISION HISTORY

Clicking the version allows you to jump to the revised page.
Also, clicking the version at the upper right on the revised page allows you to jump to the next revised page.

Ver.	Date	Description of Revision
1.1	2001.10	Correction of exploded view and add Ref.No.9 on parts list (ENG-01005)
1.0	2001.08	New